Multiplexers, Demultiplexers and combinational circuit design

Md. Islahur Rahman Ebon
Lecturer, EEE, NBIU
Mob: 01721000469
Email: irebon.rus121@gmail.com

What is a Multiplexer?

- A digital logic circuit that accepts several data inputs and allows only one of them at a time to flow through the output is called a **multiplexer or MUX**.

- A **multiplexer**, also referred to as **MUX**, is a combination logic circuit that is designed to accept multiple input signals and transfer only one of them through the output line.

- In simple words, a multiplexer is a digital logic device that selects one-out-of-N ($N = 2^n$) input data sources and transmits the selected data to a single output line.

The multiplexer is also called **data selector** as it selects one from several. The block diagram of a typical **2^n:1** multiplexer is shown in Figure 1.

In the case of multiplexer, the selection of desired data input to flow through the output line is controlled with the help of **SELECT lines**. In the block diagram of mux in Figure 1, I_0, I_1,... I_{n-1}, i.e., (2^n) are the input lines, and **"n"** be the select lines. These select lines will determine which input is to be routed to the output.

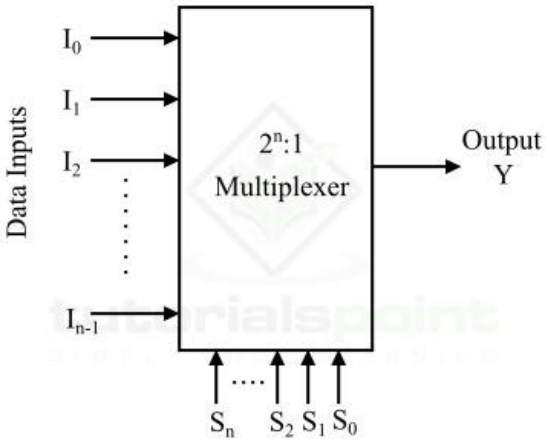

Figure 1 - Digital Multiplexer

Hence, the multiplexer works as a multi-position switch whose operation is controlled by digital signals. These digital control signals are applied to the select lines to determine which data input will be switched to the output line.

Function of Multiplexer

Multiplexer is a digital logic device which is used to perform **multiplexing** of data. Where, multiplexing simply means sharing of data. Technically, when a particular data is selected from multiple input data sources and transmitted the selected data to a single output channel, it is called **multiplexing**.

There are two types of multiplexing namely, **frequency multiplexing and time multiplexing**.

When multiple devices are connected to a single transmission line in a system. At any point of time, only one device is using the line to transmit data, then this is called time multiplexing. On the other hand, when multiple devices share a common line to transmit data but at different frequencies, it is called frequency multiplexing.

Types of Multiplexers

Based on input data lines and select lines, the multiplexer can be of several types. But, in this article, we will discuss only the following three types of multiplexers –

- 2×1 Multiplexer
- 4×1 Multiplexer

- 8×1 Multiplexer
- 16×1 Multiplexer

2×1 Multiplexer

The block diagram of a 2×1 multiplexer is shown in Figure 2. The 2×1 multiplexer is basic two input multiplexer which has two data input lines designated as I_O and I_1, one data select line denoted by S and one output line denoted by Y. The 2×1 mux is used to connect two 1-bit data sources to a common designation.

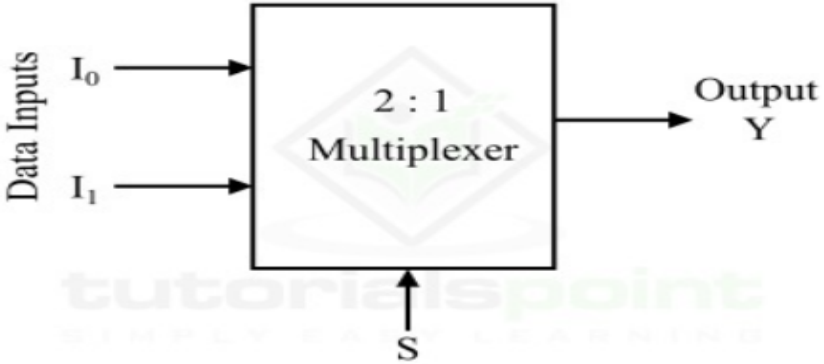

Figure 2 - 2:1 Multiplexer

In the 2×1 multiplexer, the logic level of the digital signal applied to the select line S determines which data input will pass through the output line. The operation of the 2×1 multiplexer can be understood from the following truth table.

Select Line (S)	Output (Y)
0	I_O
1	I_1

Using this truth table, we can write the logic expression for the output of 2:1 MUX as,

$$Y = \bar{S}I_0 + SI_1$$

To implement this logic expression, we require two AND gates, one NOT gate, and one OR gate. The logic circuit of the 2:1 MUX is shown in Figure-2.

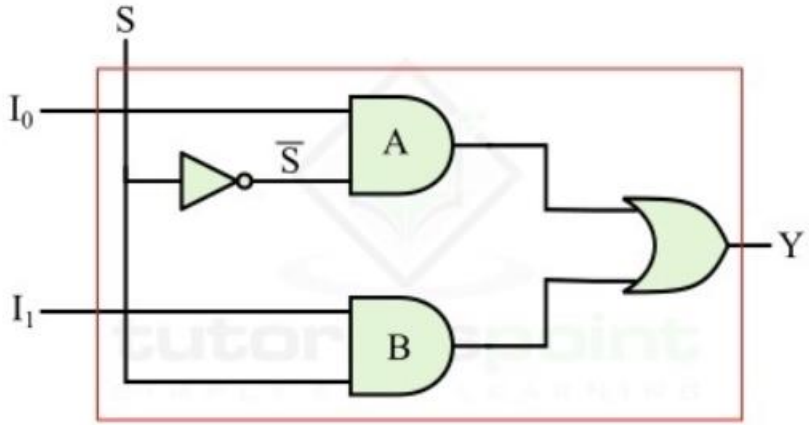

Figure 2 - 2:1 Multiplexer

Operation

This logic circuit of the 2:1 MUX shown in figure-2 will work as follows –

- When S = 0, the AND gate A is enabled and the AND gate B is disabled. Therefore, the output Y = I_0.
- When S = 1, the AND gate A is disabled and the AND gate B is enabled. Therefore, the output Y = I_1.

This is how, we can design a 2:1 multiplexer.

4×1 Multiplexer

4×1 Multiplexer has four data inputs I_3, I_2, I_1 & I_0, two selection lines s_1 & s_0 and one output Y. The **block diagram** of 4×1 Multiplexer is shown in the following figure.

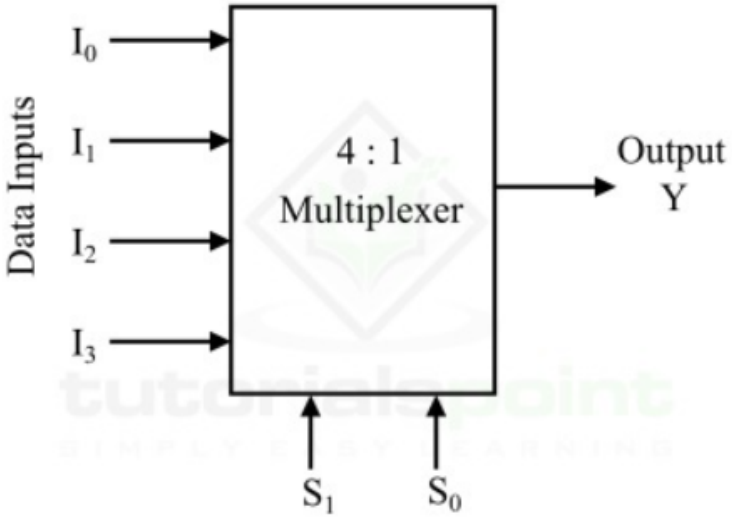

Figure 3 - 4:1 Multiplexer

One of these 4 inputs will be connected to the output based on the combination of inputs present at these two selection lines. **Truth table** of 4×1 Multiplexer is shown below.

Selection Lines		Output
S_1	S_0	Y
0	0	I_0
0	1	I_1
1	0	I_2
1	1	I_3

From Truth table, we can directly write the **Boolean function** for output, Y as

$$Y = S_1'S_0'I_0 + S_1'S_0I_1 + S_1S_0'I_2 + S_1S_0I_3$$

We can implement this Boolean function using Inverters, AND gates & OR gate. The **circuit diagram** of 4×1 multiplexer is shown in the following figure.

From Truth table, we can directly write the **Boolean function** for output, Y as

$$Y = S_1'S_0'I_0 + S_1'S_0I_1 + S_1S_0'I_2 + S_1S_0I_3$$

We can implement this Boolean function using Inverters, AND gates & OR gate. The **circuit diagram** of 4×1 multiplexer is shown in the following figure.

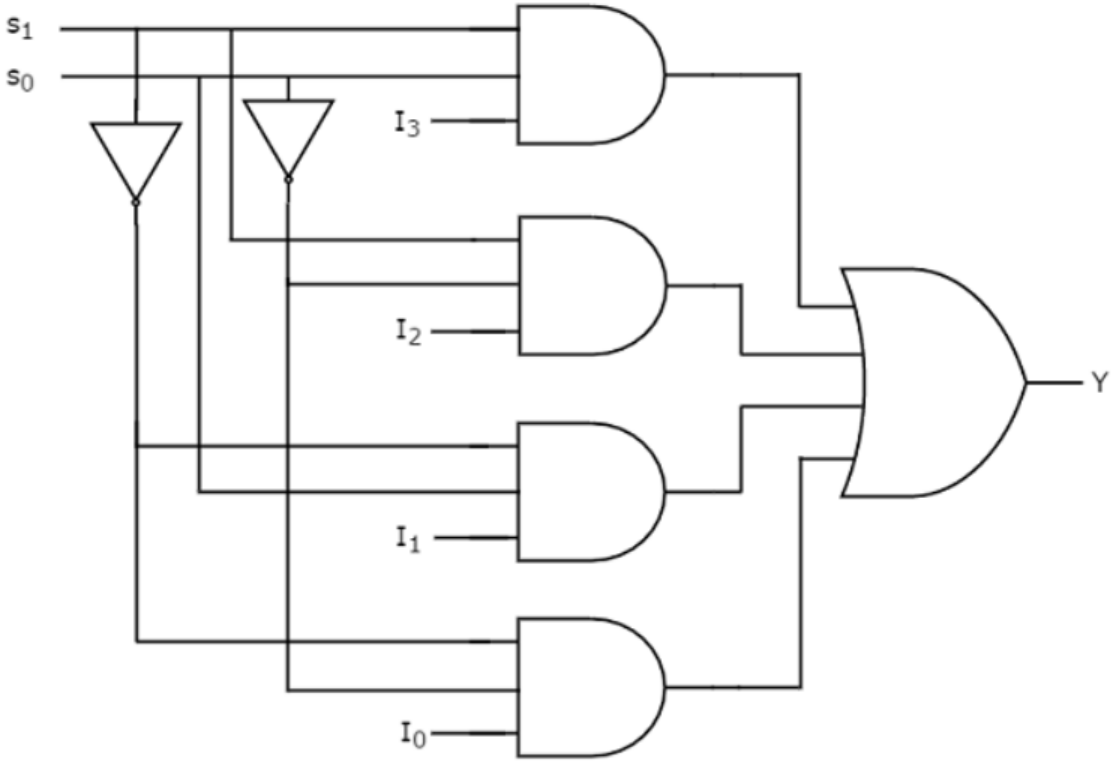

Operation

This logic circuit of the 4:1 MUX shown in Figure-3 will work as follows –

- When $S_1 = 0$ and $S_0 = 0$, the AND gate A is enabled, and the AND gates B, C, and D are disabled. So, the output $Y = I_0$.
- When $S_1 = 0$ and $S_0 = 1$, the AND gate B is enabled, and the AND gates A, C, and D are disabled. So, the output $Y = I_1$.
- When $S_1 = 1$ and $S_0 = 0$, the AND gate C is enabled, and the AND gates A, B, and D are disabled. So, the output $Y = I_2$.
- When $S_1 = 1$ and $S_0 = 1$, the AND gate D is enabled, and the AND gates A, B, and C are disabled. So, the output $Y = I_3$.

In this way, we can design a 4:1 multiplexer.

8×1 Multiplexer

In this section, let us implement 8×1 Multiplexer using 4×1 Multiplexers and 2×1 Multiplexer. We know that 4×1 Multiplexer has 4 data inputs, 2 selection lines and one output. Whereas, 8×1 Multiplexer has 8 data inputs, 3 selection lines and one output.

So, we require two **4×1 Multiplexers** in first stage in order to get the 8 data inputs. Since, each 4×1 Multiplexer produces one output, we require a **2×1 Multiplexer** in second stage by considering the outputs of first stage as inputs and to produce the final output.

Let the 8×1 Multiplexer has eight data inputs I_7 to I_0, three selection lines s_2, s_1 & s0 and one output Y. The **Truth table** of 8×1 Multiplexer is shown below.

Selection Inputs			Output
S_2	S_1	S_0	Y
0	0	0	I_0
0	0	1	I_1
0	1	0	I_2
0	1	1	I_3
1	0	0	I_4
1	0	1	I_5
1	1	0	I_6
1	1	1	I_7

We can implement 8×1 Multiplexer using lower order Multiplexers easily by considering the above Truth table. The **block diagram** of 8×1 Multiplexer is shown in the following figure.

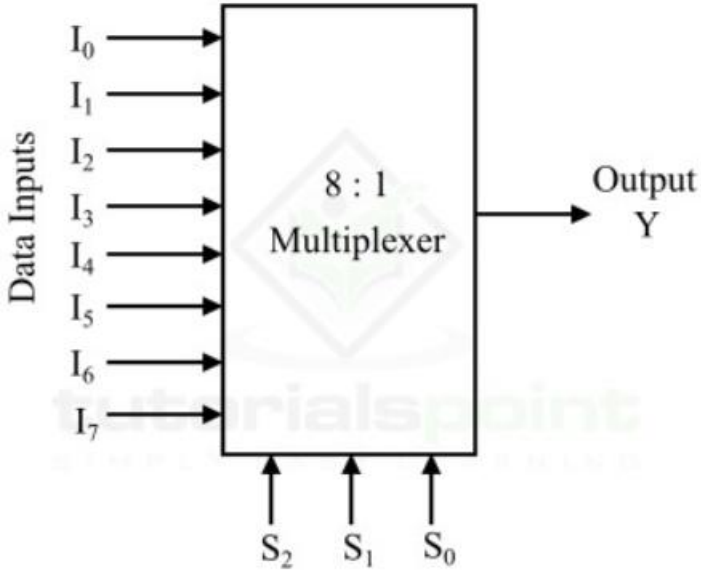

Figure 4 - 8:1 Multiplexer

Applications of Multiplexers

The multiplexer is one of the widely combinational logic circuits in digital systems. Some important applications of the multiplexers are listed below.

- Multiplexer is used as data selector device.
- Multiplexers are used in communication systems to increase the efficiency of the system.
- Multiplexers are used in telephone networks for integration of several audio signals on a single transmission line.
- To maintain large amount of data, multiplexers are also used in computer memory systems.
- Multiplexers are also employed in TV broadcasting systems.
- Multiplexers are used in satellite communication and GPS (Global Positioning System).
- Multiplexers are also used in PLC (Programmable Logic Control) systems, etc.
- Data routing and data selection
- Parallel to series conversion
- Logic function implementation
- Generation of waveform, etc.

What is a Demultiplexer?

A **Demultiplexer** is a combinational logic circuit that accepts a single input and distributes it over several output lines. Demultiplexer is also termed as **DEMUX** in short. As Demultiplexer is used to transmit the same data to different destinations, hence it is also known as **data distributor.**

There is another combinational logic circuit named multiplexer which performs opposite operation of the Demultiplexer, i.e. accepts several inputs and transmits one of them at time to the output line.

From the definition, we can state that a Demultiplexer is a 1-to-2^n device. The functional block diagram of a typical 1×2^n Demultiplexer is shown in Figure-1.

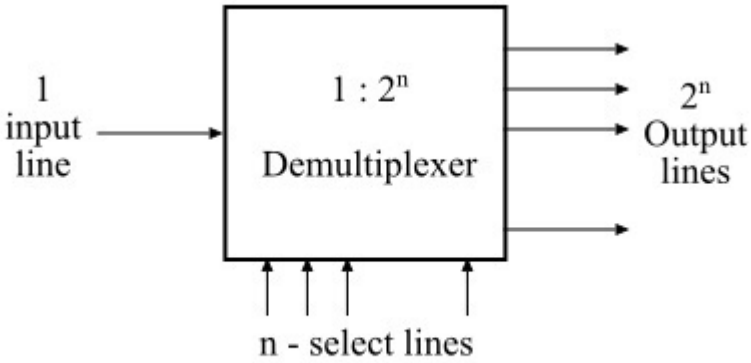

Figure 2 - Demultiplexer

It can be seen that the Demultiplexer has only one data input line, 2^n output lines, and n select lines. The logic level applied to select lines of the Demultiplexer determines the output channel to which the input data will be transmitted.

Demultiplexer circuit are the combinational logic circuit widely used in digital decoders and Boolean function generator circuits.

Types of Demultiplexer

Based on the number of output lines (2^n), Demultiplexers can be classified into several types. Some commonly used types of Demultiplexers are –

- 1×2 Demultiplexer
- 1×4 Demultiplexer

1×2 Demultiplexer

The functional block diagram of a 1×2 Demultiplexer is shown in Figure-2.

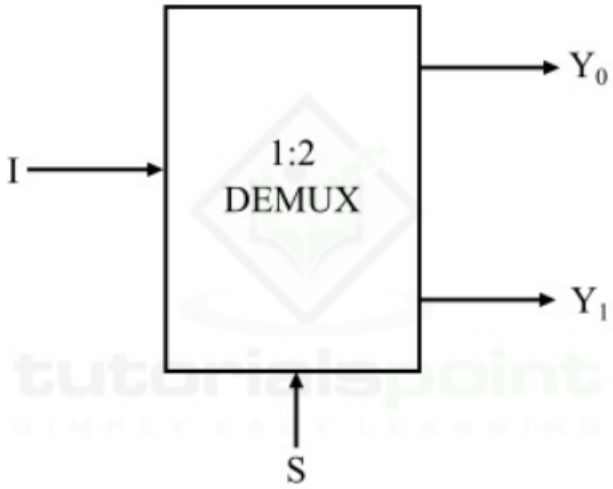

Figure 2 - 1:2 Demultiplexer

The 1×2 Demultiplexer consists of 1 input line (I), 1 select line (S), and 2 output lines (Y_0 and Y_1). The logic level applied at the select line determines the output line to which the input data will be transmitted.

The operation of the 1×2 Demultiplexer can be analyzed with the help of its function table given below.

Select Line	Outputs	
S	**Y_1**	**Y_0**
0	0	I
1	I	0

From this function table of 1×2 Demultiplexer, we can directly derive the Boolean expression for each output as follow.

$$Y_0 = \bar{S}\,I$$

And,

$$Y_1 = S\,I$$

1×4 Demultiplexer

The functional block diagram of 1×4 Demultiplexer is shown in Figure-3.

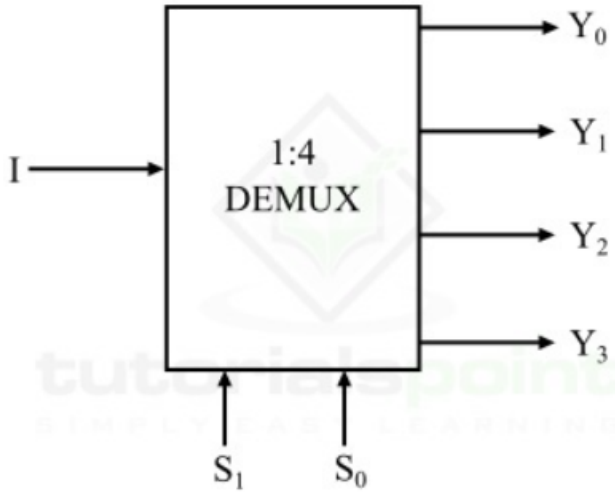

Figure 3 - 1:4 Demultiplexer

The 1×4 Demultiplexer has 1 input line (I), 2 select line (S_0 and S_1), and 4 output lines (Y_0, Y_1, Y_2, and Y_3). The logic level applied to the select lines determines the output line to which the input data (I) will be transmitted.

The operation of the 1×4 Demultiplexer can be understood with the help of its function table given below.

Select Line		Outputs			
S_1	S_0	Y_3	Y_2	Y_1	Y_0
0	0	0	0	0	I
0	1	0	0	I	0
1	0	0	I	0	0
1	1	I	0	0	0

From this truth table of 1×4 Demultiplexer, we can directly write the Boolean expression for each output as follow.

$$Y_0 = \bar{S_1}\,\bar{S_0}\,I$$

$$Y_1 = \bar{S_1}\,S_0\,I$$

$$Y_2 = S_1\,\bar{S_0}\,I$$

$$Y_3 = S_1\,S_0\,I$$

We can easily understand the operation of the above circuit. Similarly, you can implement 1×8 Demultiplexer and 1×16 Demultiplexer by following the same procedure.

Applications of Demultiplexer

Demultiplexer is a crucial combinational logic circuit which is used in a number of applications. Some important uses of Demultiplexers are listed below –

- Demultiplexer are used in several input and output devices for data routing.
- Demultiplexer are used in digital control systems to select one signal from a mutual stream of signals.
- Demultiplexer are also employed for data transmission in synchronous systems.
- Demultiplexer are also utilized in data acquisition systems.
- Demultiplexer can be used for generating Boolean functions.
- Demultiplexer can be used in serial to parallel converters.
- Demultiplexer are used for broadcasting of ATM packets.
- Demultiplexer can also be used to design automatic test equipment, etc.

Difference	Multiplexer	Demultiplexer
Definition	A multiplexer is a combinational digital circuit that takes multiple data inputs and provides only single output.	A demultiplexer is a combinational digital circuit that takes single input and provides multiple outputs.
Abbreviated name	The abbreviation used to represent the multiplexer is MUX.	The abbreviation used to represent the demultiplexer is DEMUX.
Input and output lines	Multiplexer has 2^n input lines and 1 output line. Where, n is the number of select lines.	Demultiplexer has 1 input line and 2^n output lines. Where, n is the number of select lines.
Also known as	Multiplexer is also known as a "data selector".	Demultiplexer is also known as "data distributor".
Operating principle	The operating principle of the multiplexer is "many to one".	The operating principle of a demultiplexer is "ne to many".
Acts as	Multiplexer acts as a digital multi-position switch.	Demultiplexer acts as a digital circuit.
Conversion technique	A multiplexer performs parallel to serial conversion.	A demultiplexer performs serial to parallel conversion.
Function of control signal	In case of multiplexer, the function of control signal is to select a specific input that has to be transmitted at the output.	In demultiplexer, the function of control signal is to deliver the single input signal over the multiple output lines.
Examples	•Examples of some common multiplexers are8:1 Multiplexer •16:1 Multiplexer •32:1 Multiplexer	•Some common demultiplexers are1:2 Demultiplexer •1:4 Demultiplexer •1:8 Demultiplexer •1:16 Demultiplexer
Practical importance	In practice, the multiplexer increases the efficiency of the communication system by enabling the data transmission using a single line.	In practice, the demultiplexer takes the output of a multiplexer and convert in its original form at the receiver end.
Usage in time-division multiplexing	A multiplexer is used at the transmitter end in the time-division multiplexing (TDM).	The demultiplexer is used at the receiver end in the time-division multiplexing.
Applications	The multiplexers are commonly used in communication systems, telephone networks, computer memories, etc.	The demultiplexers are used in communication systems, reconstruction of parallel data, ALU, etc.

What is a Combinational Circuit?

- A combinational circuit is a type of digital logic circuit whose output depends on the present input values only and does not depend on past input and output values.

- Therefore, a combinational circuit is considered to not have a memory element in its circuit that stores previous inputs and outputs.

- Instead, it consists of a certain number of input lines to apply current input values and a certain number of output lines.

- The most important characteristic of a combinational circuit is that it does not have any feedback path between input and output. Therefore, the combinational circuits can be categorized as open-loop systems.

Block Diagram of Combinational Circuit

The following figure depicts the block diagram of a combinational logic circuit.

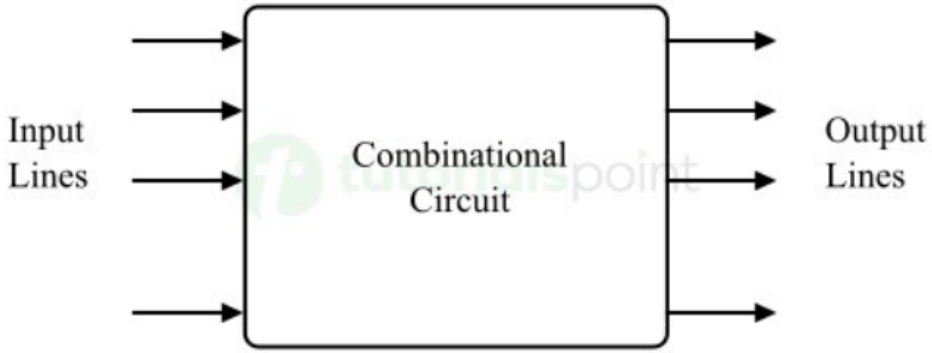

Here, we can see that there are only three key elements in the circuit diagram of a combinational circuit, they are –

- **Input Lines** – The input lines are used to enter the input values into the combinational circuit.
- **Processing Unit** – It is the main element that processes the input values depending on the type of the circuit. For example, a full adder adds three binary bits.
- **Output Lines** – The output lines are used to take results generated by the circuit.

Characteristics of Combinational Circuits

The following are the main characteristics of combinational circuits –

- The output of a combinational circuit, at any instant of time, depends only on the present input values at that instant of time.
- Combinational circuits do not use any kind of memory element in their circuits. Thus, the previous state of input and output values do not have any effect on the present operation of the circuit.
- The output of a combinational circuit can be entirely predicted using its logical operation and input values.
- Combinational circuits produce an instantaneous output in response to any change in its input values.

Types of Combinational Circuits

In digital electronics, the combinational circuits are important components of digital systems. Depending on the functions performed, there are various types of combinational circuits. Some common types of combinational circuits and their functions are explained below –

- Binary Adders
- Binary Subtractors
- Multiplexers (MUX)
- Demultiplexers (DEMUX)
- Encoders
- Decoders
- Comparators

Limitations of Combinational Circuits

Combinational circuits have several advantages such as fast operational speed, simpler circuit, predictable operation, etc. However, they do have several limitations too, some of which are listed below –

- Combinational circuits do not have any memory element. They are incapable to store history of circuit operation.
- Combinational circuits cannot be used to implement certain highly complex logic functions.
- Combinational circuits do not have any feedback mechanism. That makes the combinational circuits to have limited functionality.
- At large scale, combinational circuits have several design complexities that can result in poor performance and inefficient resource utilization.

Applications of Combinational Circuits

Combinational circuits are the fundamental building blocks in various digital devices and systems. They are widely used in several digital devices in which combinational circuits are used –

- Microprocessors and Microcontrollers
- Digital Computers
- Calculators
- Digital Communication Systems
- Keyboards
- Smartphones and Digital Watches, etc